High -Y **Adjuster**

WHAT IS THE HIGH-Y CONNECTOR?

Bla bla bla

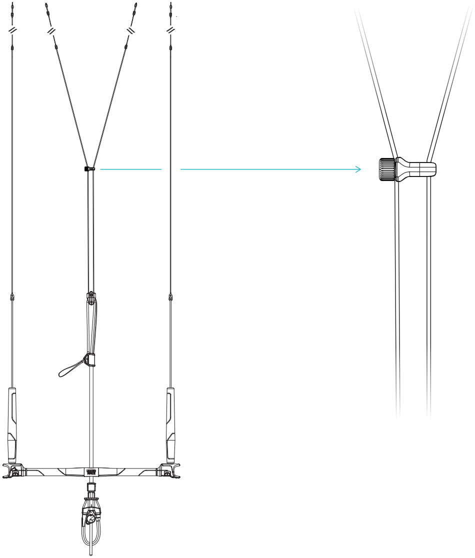

LIQUID FORCE | KITE BOARD ING

High -Y **Adjuster**

HOW TO INSTALL
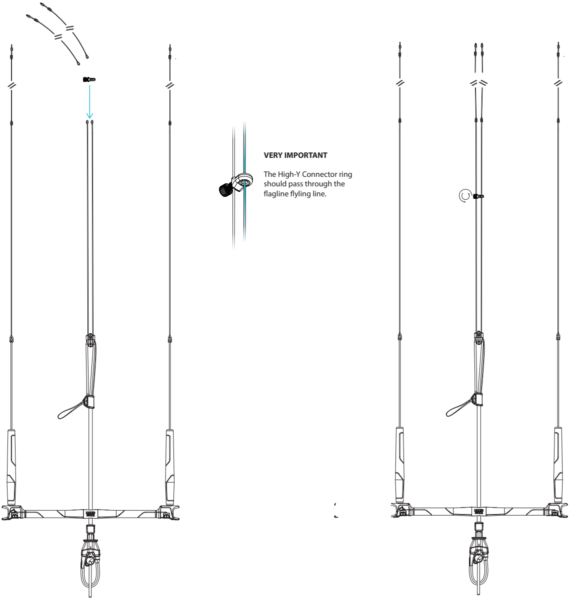
Bla bla bla